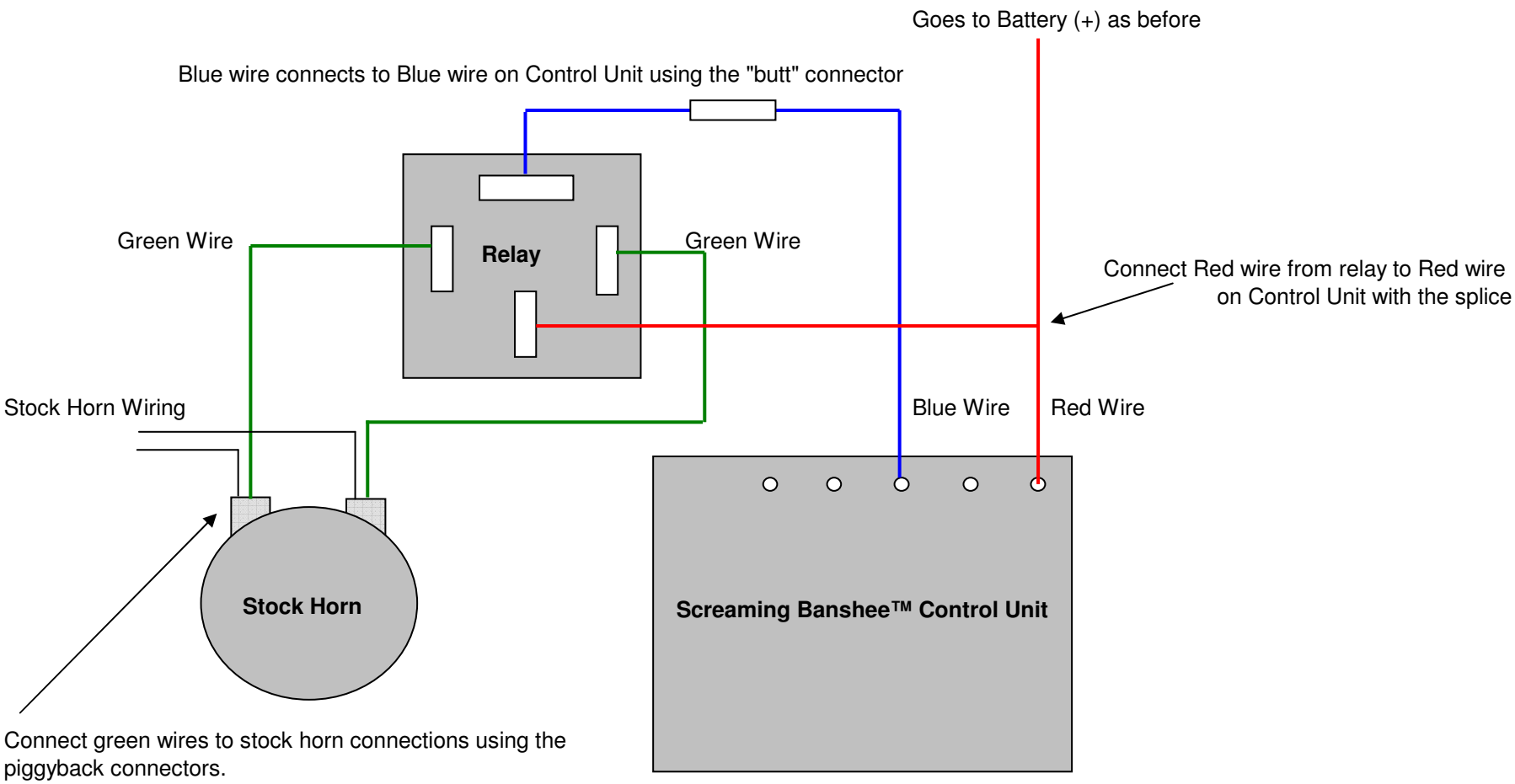

Note: All other wires to the Control Unit are wired as before - no other changes are required